Karlsruhe Institute of Technology

Using Quality of Service Bounds for Effective Multi-objective Software Architecture Optimization

Qais Noorshams, Anne Martens, Ralf Reussner

QUASOSS 2010

SOFTWARE DESIGN AND QUALITY GROUP
INSTITUTE FOR PROGRAM STRUCTURES AND DATA ORGANIZATION, FACULTY OF INFORMATICS

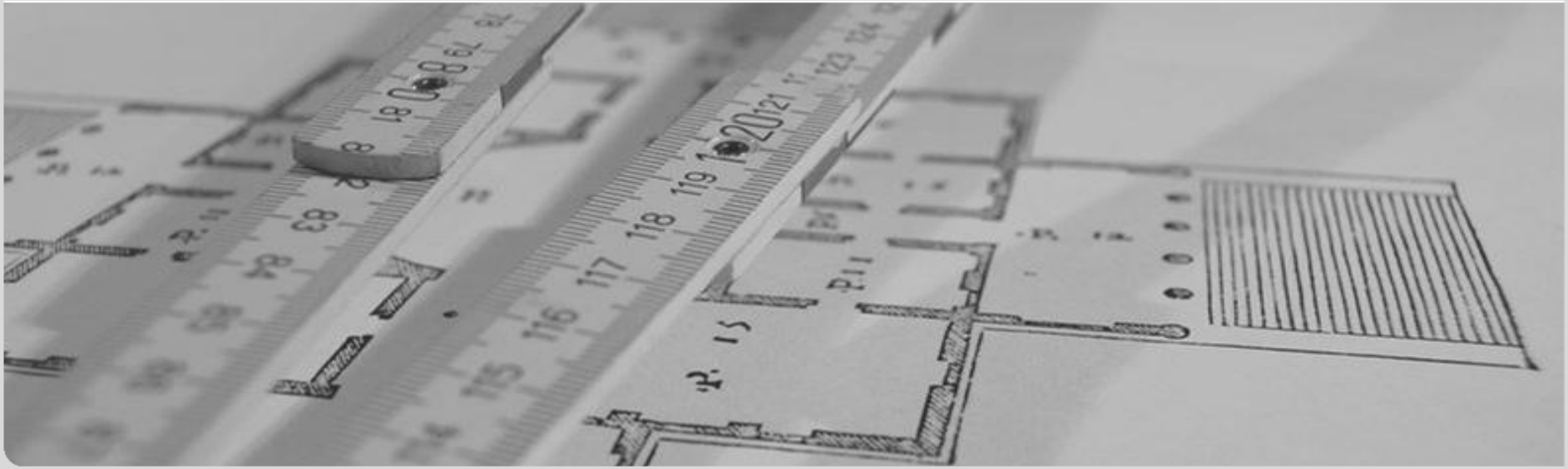

Motivation

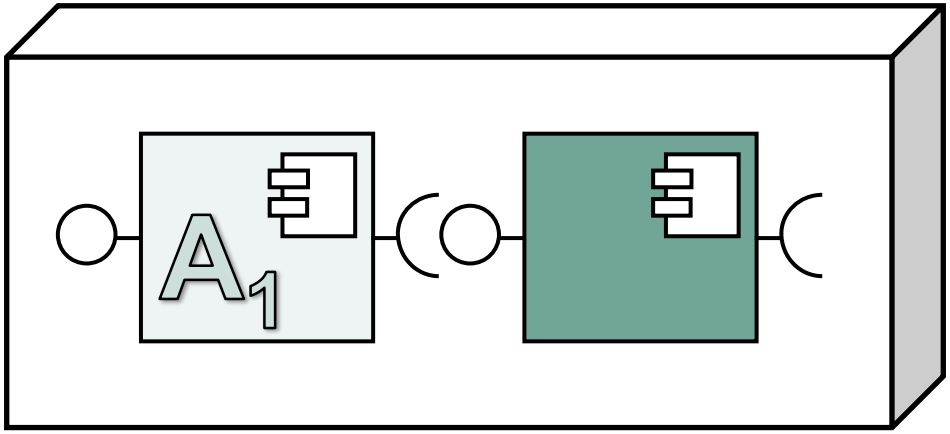

Quality	Prediction
Response Time	3 s
P(failure on demand)	0.001
Costs	2000 €

Motivation

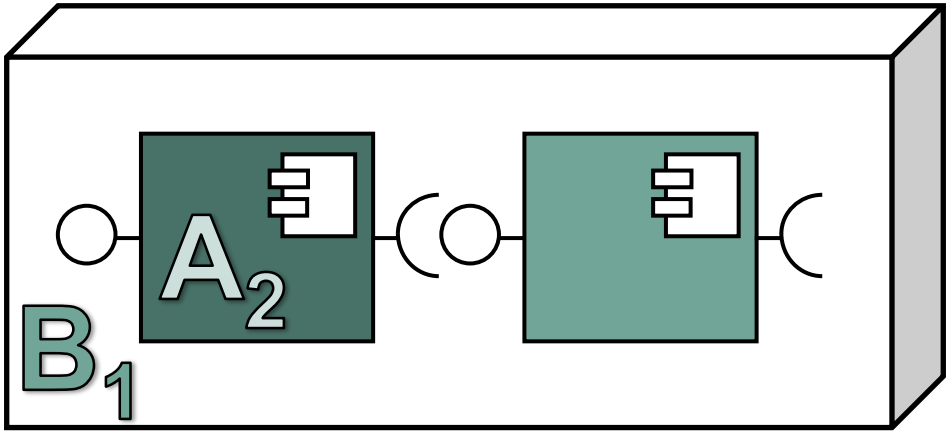

Quality	Prediction	Bound
Response Time	7 s ↗	< 5 s ✗
P(failure on demand)	0.001	< 0.002 ✓
Costs	1000 € ↘	< 1500 € ✓

Motivation

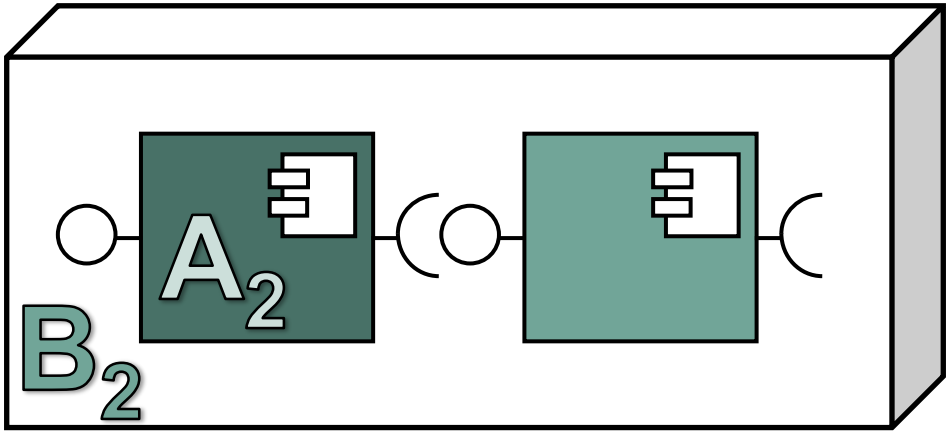

Quality	Prediction	Bound
Response Time	4 s ↘	< 5 s ✓
P(failure on demand)	0.0015 ↗	< 0.002 ✓
Costs	1250 € ↗	< 1500 € ✓

Motivation

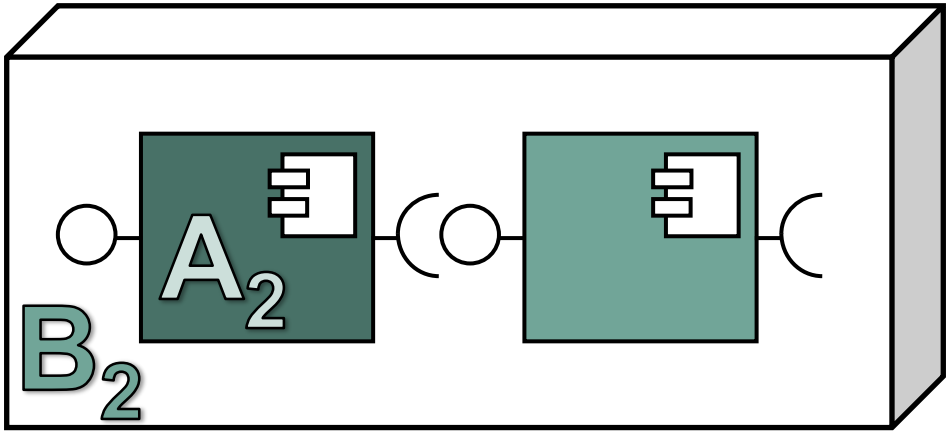

Quality	Prediction	Bound
Response Time	4 s	< 5 s
P(failure on demand)	0.0015	< 0.001
Costs	1250 €	< 1500 €

Problem

Challenges

- Large search space
- Multiple, conflicting objectives
- Exact required quality may be unclear

Problems

- Exploration of search space with multi-objective metaheuristics is time consuming
- Too many uninteresting solutions found

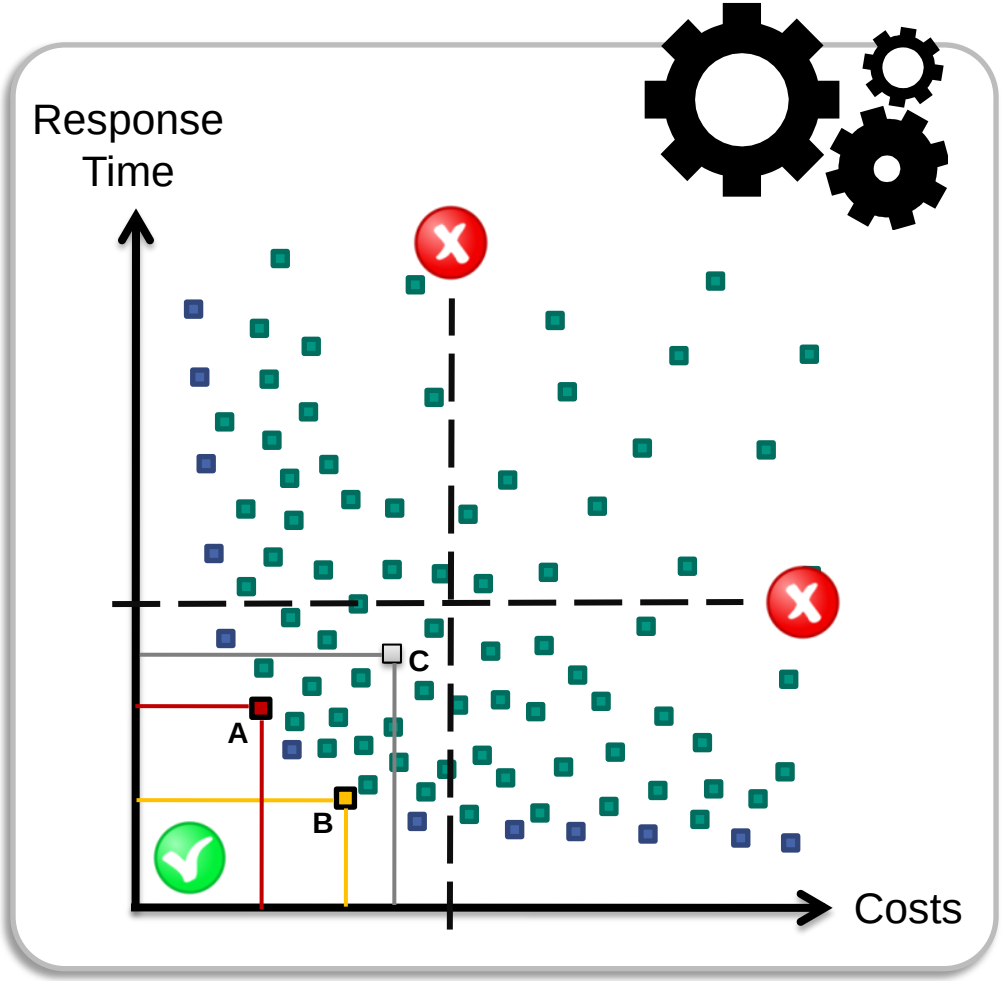

Related Work

Canfora2005

- Optimize costs while satisfying constraints

No other quality criteria

McGregor2007, Menascé2010, Xu2010

- Aim at satisfying constraints

Stop if requirements fulfilled
No trade-off

Aleti2009, Martens2010

- Multi-objective optimization using evolutionary algorithms

Quality requirements not included in the optimization

Solution

Combine Multi-objective Architecture Optimization and Quality of Service Bounds

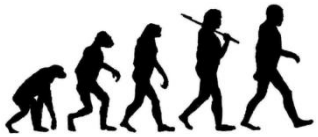

Multi-objective Optimization Problem

Constrained Evolutionary Algorithm

Quality of Service Bounds

Pareto-optimal Solutions

Evolutionary Algorithm

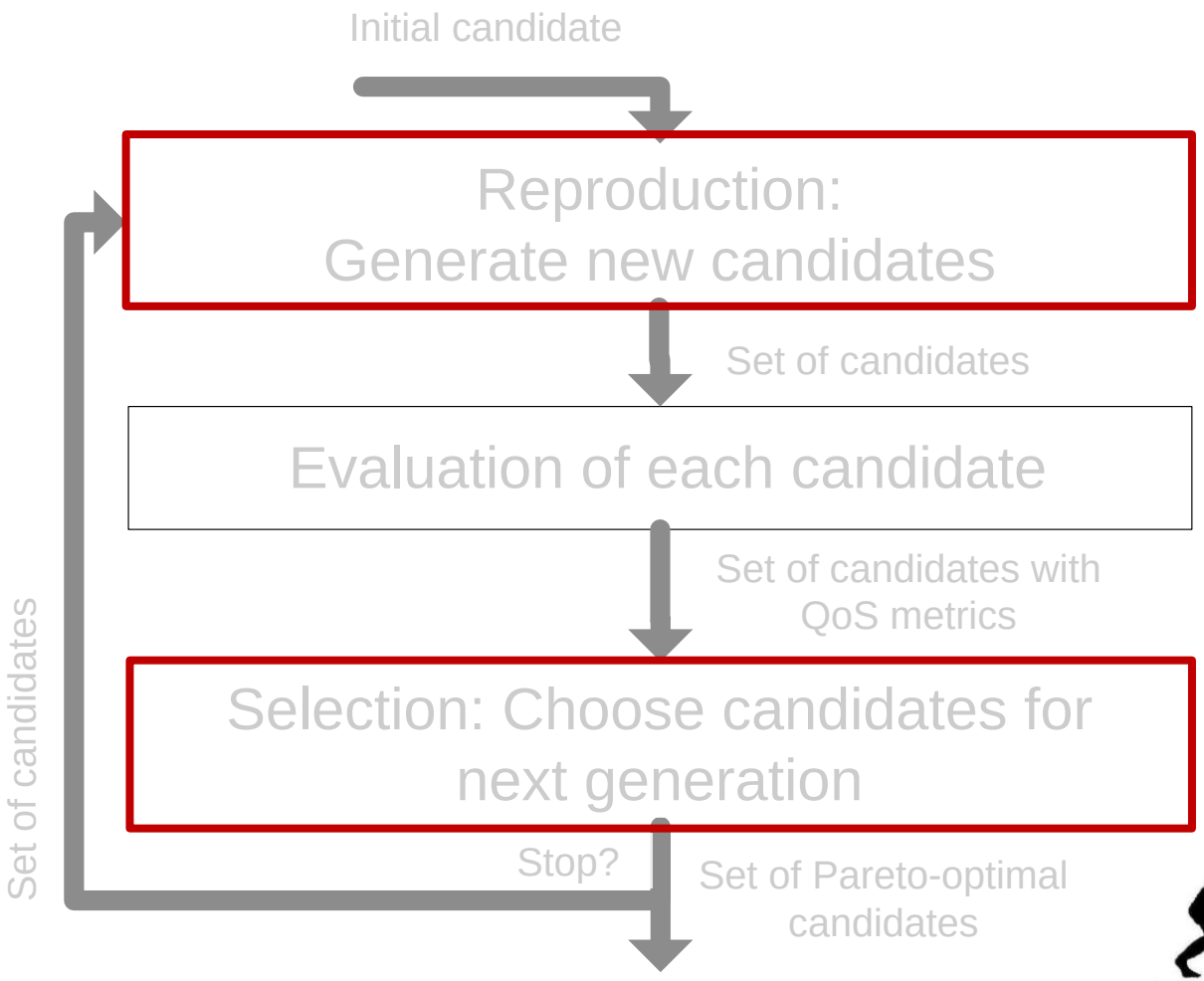

- Approximate
- Non-deterministic
- Efficient for large search spaces

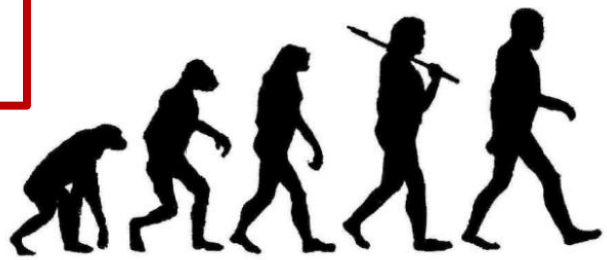

Evolutionary Algorithm

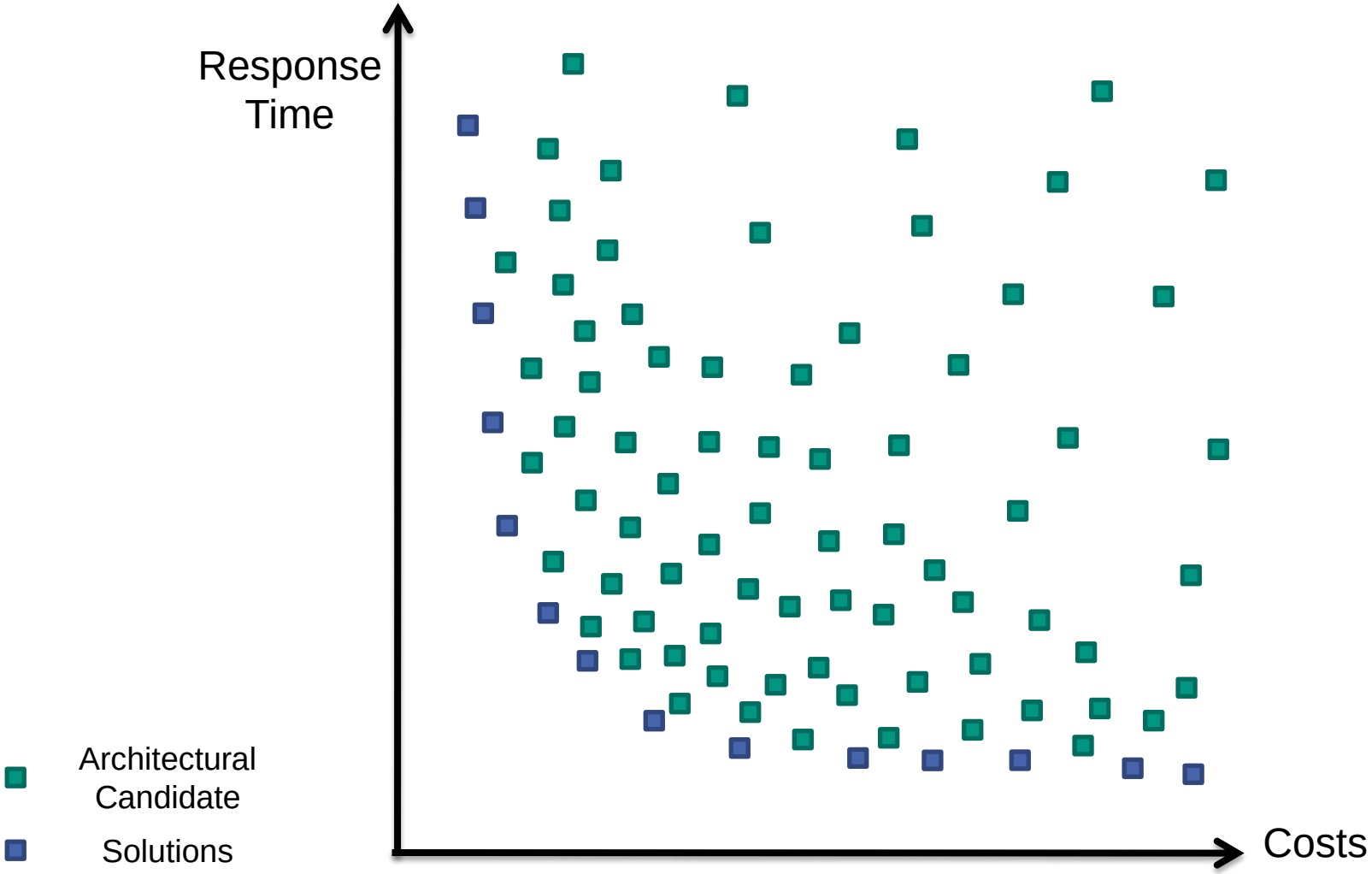

Constrained Evolutionary Algorithm

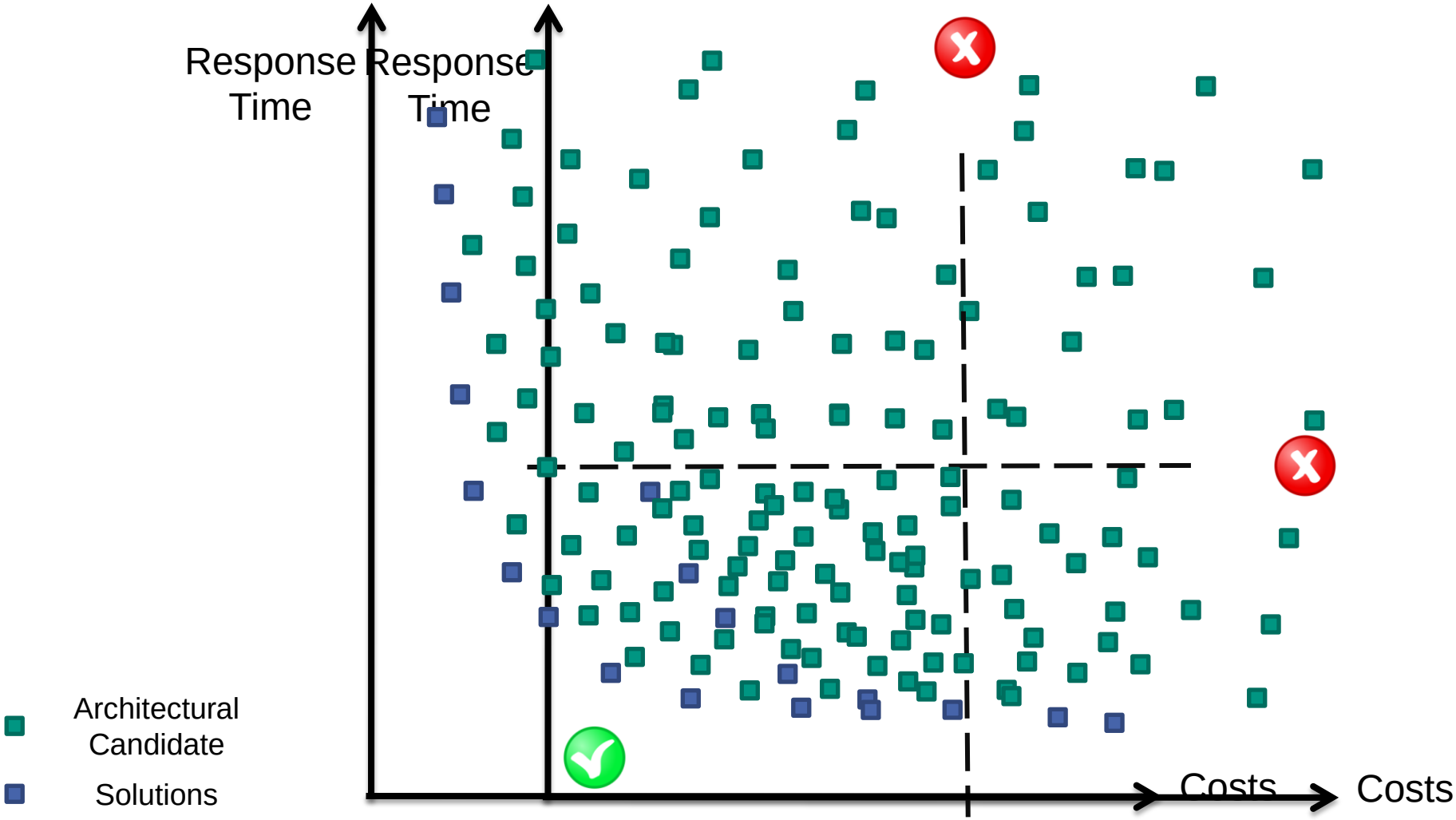

Case Study – Setup

Claim: Our approach finds solutions faster than unconstrained evolutionary algorithms

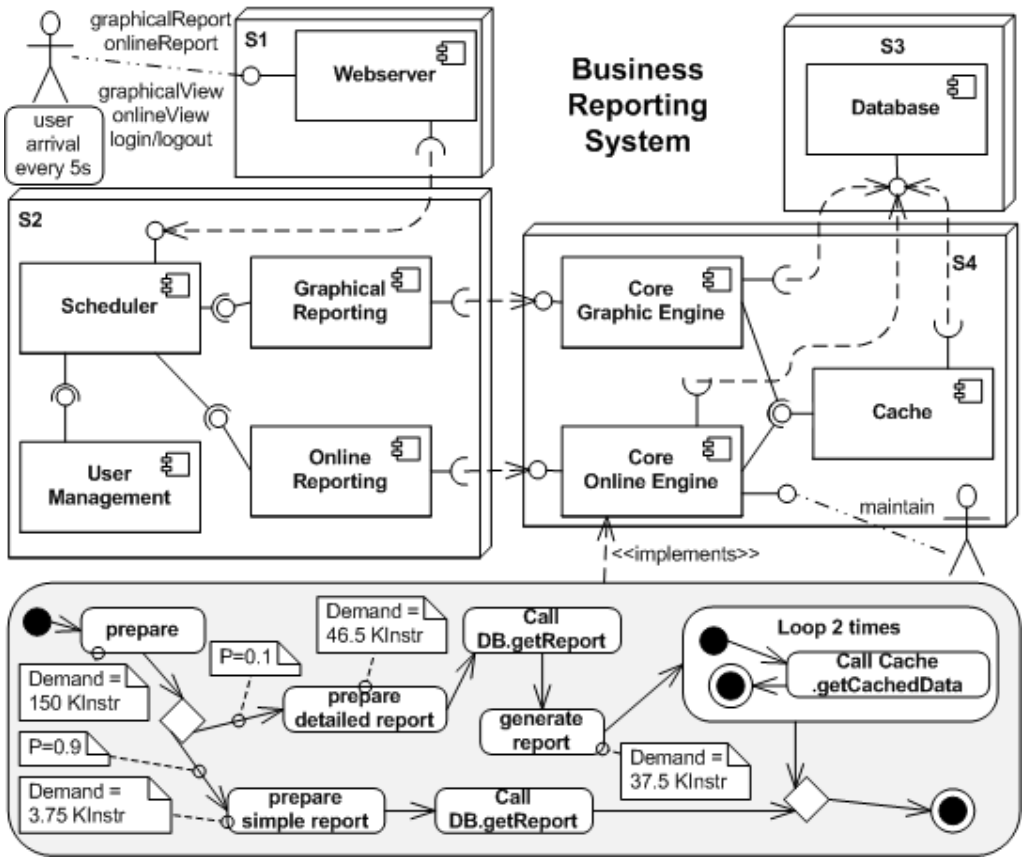

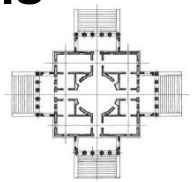

Palladio Component Model

Minimize:
- Response time
- P(failure on demand)
- Costs

Possible Changes:
- Allocate to up to 9 servers
- Different CPU types per server

Case Study – Result

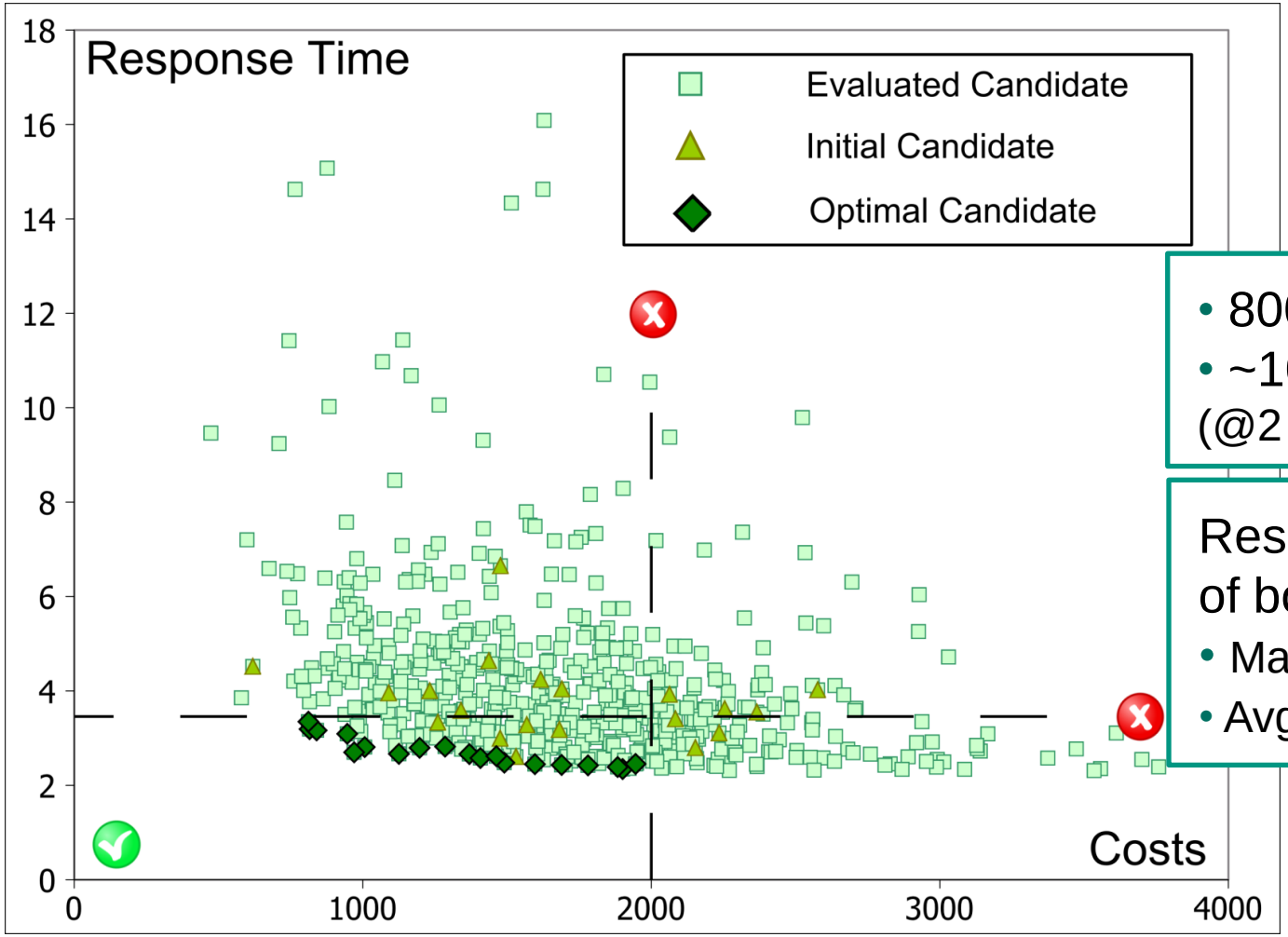

- 800 candidates
- ~10h

(@2 x 2GHz, 2GB RAM)

Result – Time savings of bounded search:

- Max. 89.2%
- Avg. 38.8%

Conclusion

Approach

- Combination of metaheuristic multi-objective software architecture optimization and quality of service bounds

Benefits

- Increasing effectiveness in software architecture optimization
- Reducing time to find valuable solutions

Evaluation

- Implementation of a tool for focused software architecture optimization
- Case Study: Focused optimization on average ~40% faster

Future Work

- Compare constraint-handling techniques
- Further analysis and improvements of metaheuristic multi-objective software architecture optimization

Literature

- Aleti2009 – A. Aleti, S. Bjornander, L. Grunske, and I. Meedeniya. Archeopterix: An extendable tool for architecture optimization of AADL models. International ICSE Workshop on Model-Based Methodologies for Pervasive and Embedded Software (MOMPES), pages 61-71, 2009.
- Canfora2005 – G. Canfora, M. D. Penta, R. Esposito, and M. L. Villani. An approach for qoS-aware service composition based on genetic algorithms. In H.-G. Beyer and U.-M. O'Reilly, editors, Genetic and Evolutionary Computation Conference, GECCO 2005, Proceedings, Washington DC, USA, June 25-29, 2005, pages 1069-1075. ACM, 2005.
- Martens2010 – Anne Martens, Heiko Koziolek, Steen Becker, and Ralf Reussner: Automatically improve software architecture models for performance, reliability, and cost using evolutionary algorithms. In: WOSP/SIPEW '10: Proceedings of the first joint WOSP/SIPEW international conference on Performance engineering, 105-116, New York, NY, USA, 2010. ACM.
- McGregor2007 – J. D. McGregor, F. Bachmann, L. Bass, P. Bianco, and M. Klein. Using arche in the classroom: One experience. Technical Report CMU/SEI-2007-TN-001, Software Engineering Institute, Carnegie Mellon University, 2007.
- Menascé2010 – D. A. Menasce, J. M. Ewing, H. Gomaa, S. Malex, and J. a. P. Sousa. A framework for utility-based service oriented design in SASSY. In Proc. Of WOSP/SIPEW, pages 27-36. ACM, 2010.
- Xu2010 – Xu, J. 2010. Rule-based automatic software performance diagnosis and improvement. Perform. Eval. 67, 8 (Aug. 2010), 585-611.

BACKUP

Case Study – Result

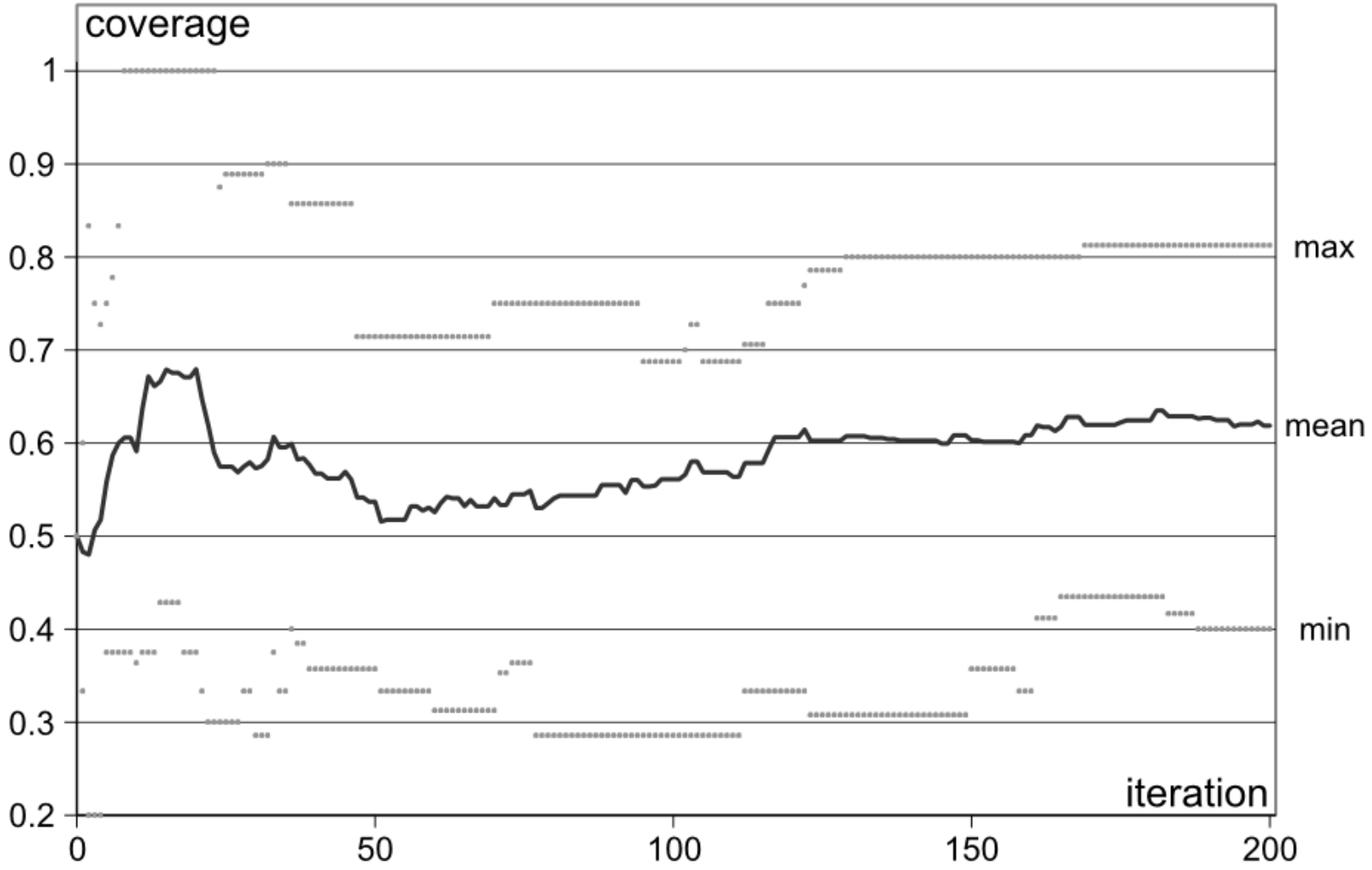

Appendix – QML Declarations

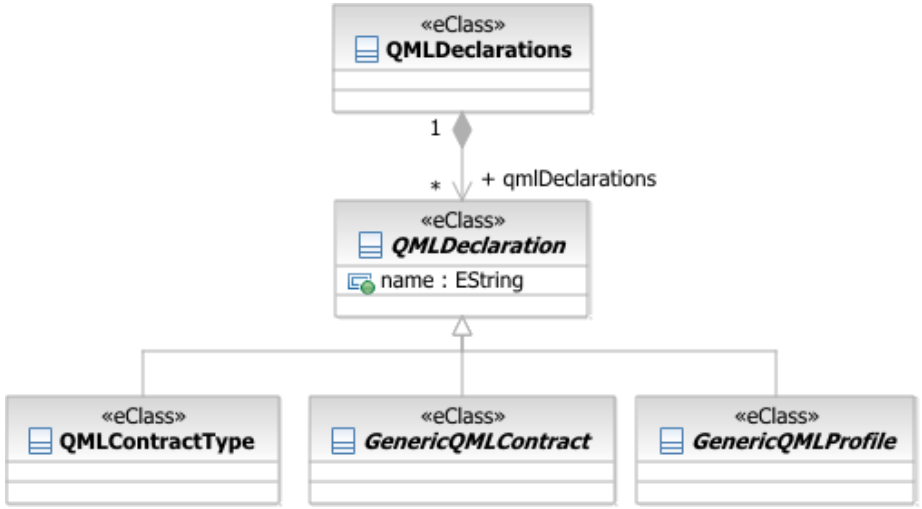

Appendix – QML Contract Type

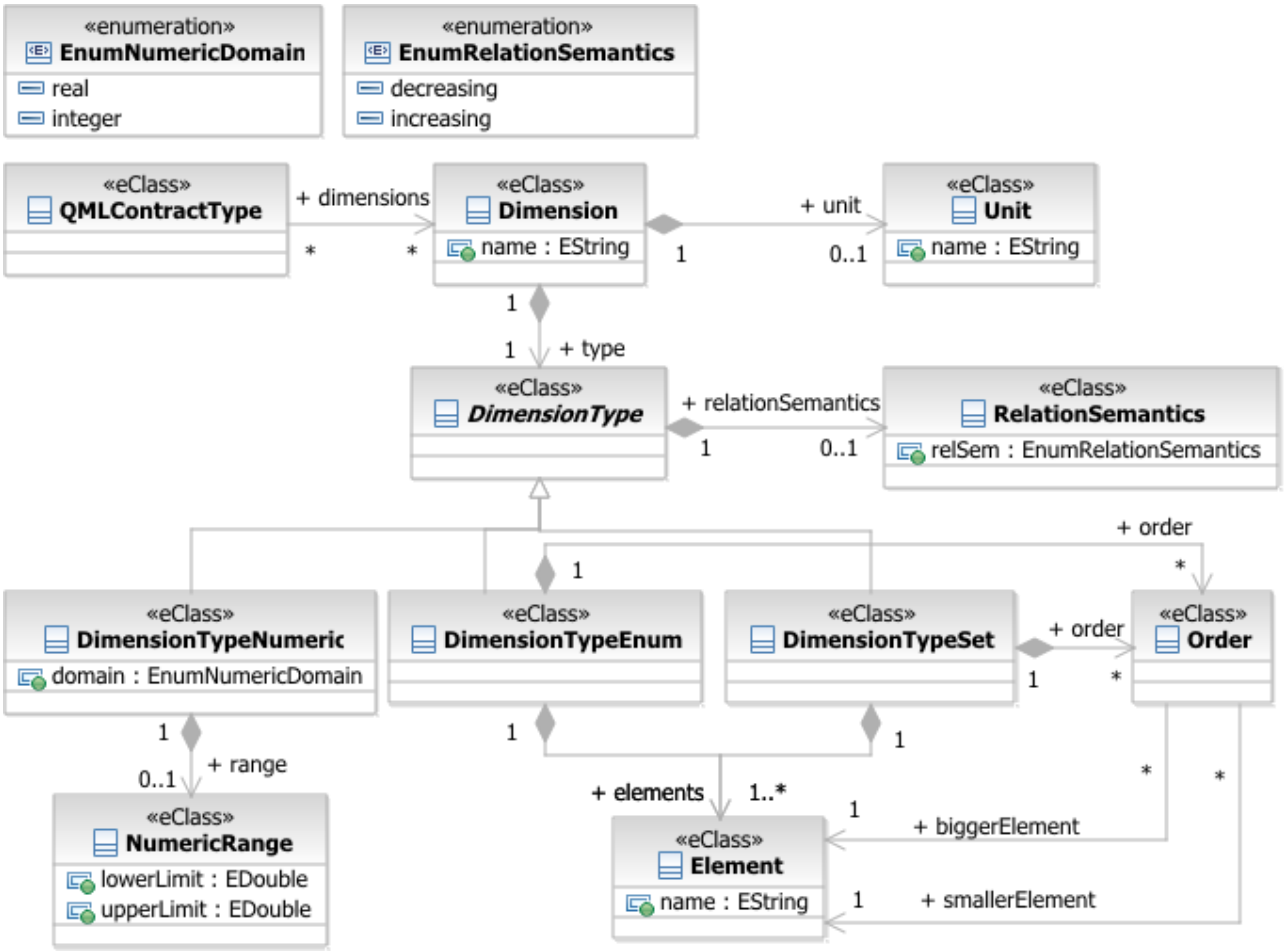

Appendix – QML Contract

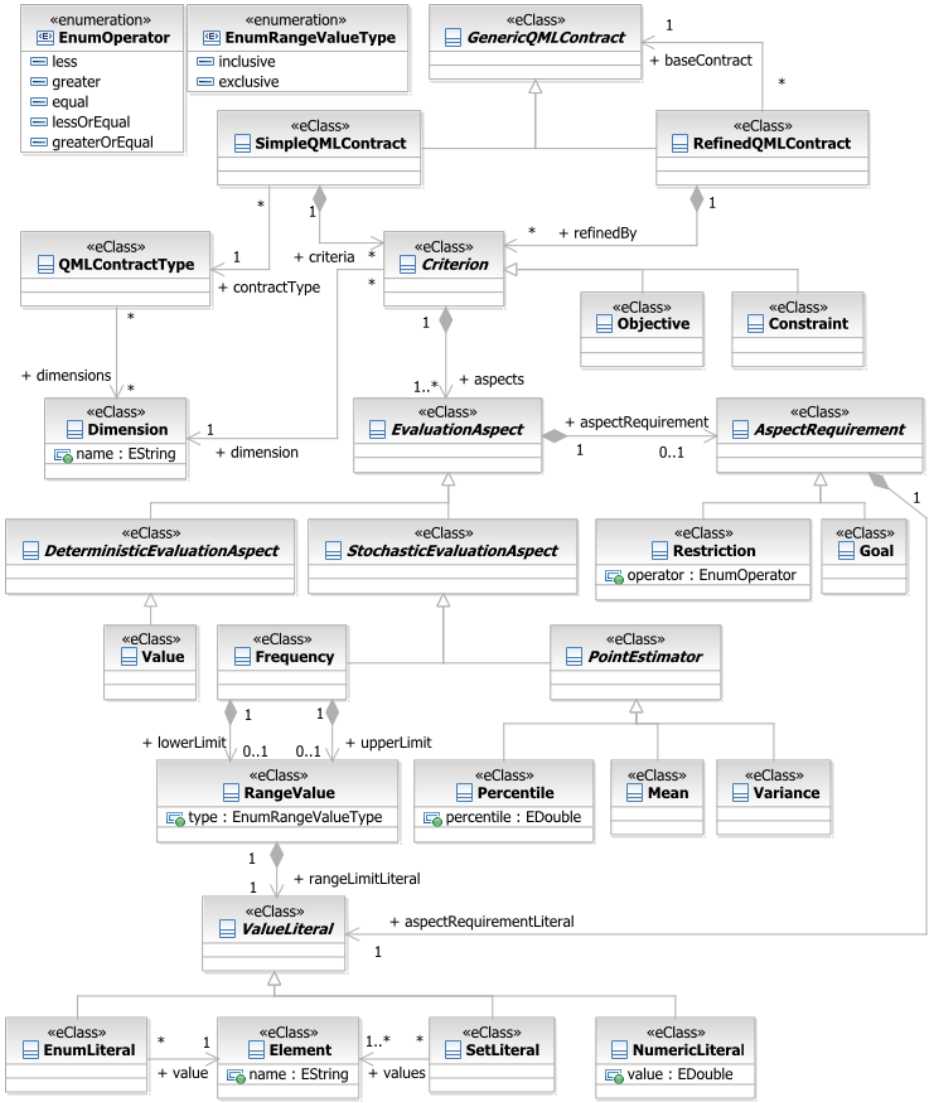

Appendix – QML Profile