Design of Distribution Automation Networks Using Survivability Modeling and Power Flow Equations

Anne Koziolek*, Alberto Avritzer†, Sindhu Suresh†, Daniel Sadoc Menasche‡, Kishor Trivedi§, Lucia Happe*
* Karlsruhe Institute of Technology, Karlsruhe, Germany
†Siemens Corporation, Corporate Research and Technology, Princeton, NJ 08540
‡Federal University of Rio de Janeiro, RJ, Brazil
§Duke University, Durham, NC 27706

***Abstract*—Smart grids are fostering a paradigm shift in the realm of power distribution systems. Whereas traditionally different components of the power distribution system have been provided and analyzed by different teams, smart grids require a unified and holistic approach taking into consideration the interplay of distributed generation, distribution automation topology, intelligent features, and others.**

In this paper, we use transient survivability metrics to create better distribution automation network designs. Our approach combines survivability analysis and power flow analysis to assess the survivability of the distribution power grid network. Additionally, we present an initial approach to automatically optimize available investment decisions with respect to survivability and investment costs.

We have evaluated the feasibility of this approach by applying it to the design of a real distribution automation circuit. Our empirical results indicate that the combination of survivability analysis and power flow can provide meaningful investment decision support for power systems engineers.

I. Introduction

The optimization of distribution automation power grids requires the development of scalable performability models that are able to capture the complexity of both the smart-grid power distribution network and the cyber-physical infrastructure that supports it. Specifically, the improvement of distribution automation smart-grid networks requires the modeling of the costs / benefits associated with providing active and reactive power generation. The cyber-physical infrastructure includes the power distribution network and the communication networks supporting the power grid failure detection, isolation and recovery feature.

Traditionally, the reliability of power systems has been quantified using average metrics, such as the system average interruption duration index (SAIDI). SAIDI is used by public service commissions in the United States to assess utilities' compliance with the commission rules. It was developed to track manual restoration times, and according to Standard 1366-2003 [1], the median value for North American utilities is roughly one and a half hours. In smart grid networks, power failure and restoration events will have a finer level of granularity, due to the deployment of reclosers, which isolate faulty sections, and demand side management system activities, such as distributed generators and demand response application systems. Therefore, there is a need to extend the SAIDI metric, and to develop new models and tools for the accurate computation of customer interruption indices, such as SAIDI, *after power failure events occur*, even if the occurrence of such events is rare.

The *survivability* of a mission-critical application is the ability of the system to continue functioning during and after a failure or disturbance [2]. We present an analytical model-based optimization approach to assess the survivability of distributed automation power grids. We use a simplified AC power flow model [3] [4] to analyze the AC power characteristics of the distribution automation circuit. The output of the power flow model (voltage ranges at each line of the circuit) is used to parameterize a performability model. Examples of parameterized performability models have been presented before [5], [6], [7], [8], [9]. The performability model is used for the computation of the distribution automation power grid survivability metric. In this paper, the survivability metric under study is the *average energy not supplied (AENS) after a failure event until full system recovery*.

The performability model accounts for the fact that the topology is sectionalized. Given a failure in section i, the key insight of the analytical model is to aggregate the sections of the network that are fed by backup sources into a single upstream node, denoted by $i+$. This aggregation allows us to efficiently quantify *transient metrics* of the network after a failure, also referred to as *survivability metrics*. For example, the model allows us to compute how the AENS after a failure varies over time as a function of the available backup power, the demand response application, and the state of the cyber-physical infrastructure. After a power failure event, some power grid areas of the network may experience restoration times of the order of minutes' magnitude, while other areas may require hours for the manual repair events to take place. The model allows for the accurate assessment of the power grid survivability by tracking the time-dependent state of the system under study.

The electrical stability of the distribution automation network that results from the automated topology reconfiguration after a section failure event is an important factor in assessing the required time for failure restoration. Therefore, in this paper we propose a power flow based optimization approach to be used for planning of distributed automated networks. We identify active and reactive power demands after a power failure with a worst-case physical location of the failure and we investigate the cost/benefit trade-offs of active and reactive distribution power generation investment. The investment costs were obtained from government research studies in sustainable distributed power generation [10].

This work is based on previous work on survivability assessment of smart grids. In [11] an analytical model to assess the survivability of distributed automation power grids was presented. The model yields closed form expressions to extensions of classical power reliability metrics such as SAIDI (System Average Interruption Duration Index). In [12] the approach presented in [11] was adapted to evaluate the impact of communication infrastructure after a section failure.

The focus of the paper at hand is on the combination of power flow analysis [13] and survivability modeling to achieve the optimal design of the distribution automation grid. The main contributions of this paper are the following.

Use of power flow algorithms for the parameterization of the survivability model: We describe the parametrization of the survivability model based on the results obtained from the power flow analysis.

Algorithms used to explore opportunities for survivability improvement: We use a transient survivability metric that is efficiently computable to create better distribution automation grid designs.

Application to real circuits: We show a case study of the application of the proposed approach to a real power circuit.

The outline of this paper is as follows. In Section II we motivate the use of survivability metrics for the assessment of distributed automation grids. In Section III we provide a short background on AC power flow analysis and of the investment options considered in this paper. In Section IV we introduce the survivability model and in Section V we show how it can be parameterized using the power flow model. The analysis of our empirical results is presented in Section VI. In Section VII we present a survey of the related literature. Section VIII presents our conclusions and suggestions for future research.

II. Design Methodology

A. System Overview

At the distribution level, the power grid consists of a set of substations, distributed side generation (e.g., Wind Power, Solar) / load management (e.g., Demand Response) and equipment associated with power distribution (e.g., lines, tap-changing transformers, capacitor banks, etc). Stability conditions are guaranteed by design, as far as all parts of the circuit are working properly and demand remains under pre-established bounds. However, demand may go beyond bounds for several reasons, such as in situations of emergency, where demand might exhibit unusual patterns. In critical situations, sections of the power grid are also more prone to failures, and backup substations might be used to supply energy to disrupted sections. Failures might occur due to several factors, such as equipment failure, incorrect load management, intentional attacks, or weather conditions (e.g., recent disruptions due to hurricane Sandy in the US [14]). In this paper our focus is on the latter. Note that physical failures due to weather condition occur independently of the electrical load.

B. Engineering Approach

The engineering approach proposed in this paper aims at jointly (1) increasing survivability by reducing recovery time and thus energy not delivered after a failure event and (2) decreasing costs to reflect budget constraints. The solutions found by this optimization approach suggest to procure new equipment such as distributed generators or capacitors or to invest in demand-response infrastructure. The recovery of the system after a failure involves manual and automated initiatives. Depending on the amount of backup energy available, and on the level of automation deployed in the system, the mean energy not supplied up to a full system recovery and the mean time to recovery might vary. Therefore, in this paper we propose an optimization approach which accounts for failures when issuing recommendations about investments.

C. Model Overview

In this section we present an overview of our methodology to optimize investments on the power grid accounting for survivability. We begin with an existing power grid circuit. Our strategy consists of the following steps:

1) Components are incrementally added to improve the system survivability metrics.
2) Certain sections of the system are conditioned to be in a failure state. In this paper, we consider a contingency case scenario with a worst-case physical location of the failure, wherein the section that fails is the one closest to the main substation, i.e., the one that maximizes network disruption.
3) Power flow analysis is done for the modified system with failures. The power flow algorithms receive as input the power circuit topology after the failure, the generation and the demand, and yield as output the voltage and the angle at each of the circuit buses.
4) The output of the power flow is used to parameterize and solve the survivability model, which yields the AENS metric.

Demand varies over the day, and across days, for various reasons. In this paper, we account for daily variations of demand by running the power flow algorithms for different values of demand. Then, we obtain from the power flow algorithms the fraction of points at which the circuit is stable given that a failure occurred. We refer to the fraction of points at which the circuit is stable as the *probability that backup power suffices to supply the upstream sections* $i+$. This is one of the key parameters of the proposed survivability model, and depends on the circuit topology and on the availability of backup power and distributed generation, among other factors. The survivability model yields the mean energy not supplied up to full system recovery, and the mean time to recovery.

These power flow and survivability evaluations can then be used in an heuristic optimization approach as shown in Figure 1. The algorithm starts with the original circuit as the candidate circuit (top right). Power flow and survivability analysis are used to determine the AENS metric. If the candidate circuit has better AENS than the previous current candidate, it is accepted as the new current circuit. Additionally, the resulting values are compared against the survivability requirements or against cost budgets. If the requirements are met, the budget is met, or a predefined number of iterations is reached, the algorithm terminates. Otherwise, more investments can be

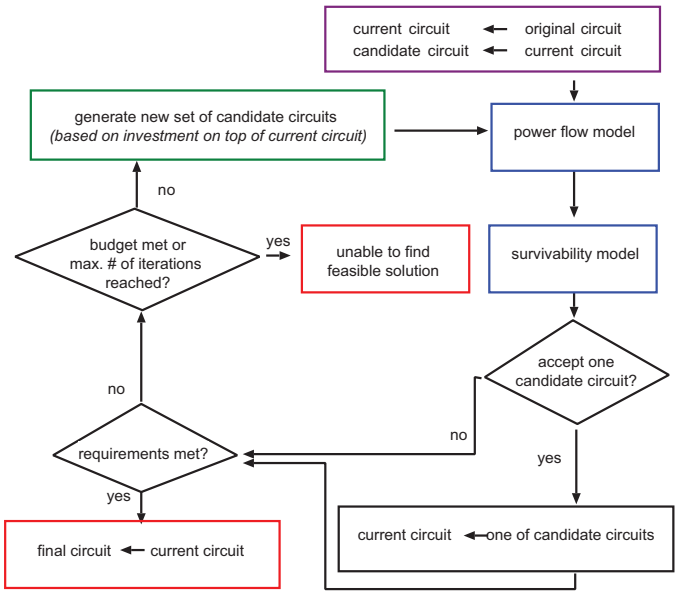

Fig. 1. Model overview

chosen generating a new set of candidate circuits, and the next iteration starts.

For generating new candidate circuits, one needs to decide (1) where (i.e., in which section) to invest and (2) how (i.e., in which equipment) to invest. To answer these questions, we adopt heuristics, which make use of the outputs of the power flow and survivability algorithms. The heuristics are briefly described in Section VI.

III. Background on Distribution Grids

In this section, we introduce some background on distribution automation systems, focusing on the aspects relevant to our model, namely (A) active and reactive power, (B) fault detection, isolation and restoration, (C) power systems stability and power flow analysis, and (D) active and reactive power investment alternatives.

A. Active and Reactive Power

In an AC circuit, active power is the power consumed by the physical work performed, as for example heat generated in a resistive load, and reactive power is the power that circulates between inductive and capacitive elements as a consequence of the interaction between their magnetic and electric fields. Reactive power flows over lines and transformers are one of the quantities of interest to system planners of distribution power grids because voltage levels are determined mostly by the reactive power that can be injected at a node. In addition, the lack of proper reactive power compensation increases the value of the electrical current required for correct system operation and the associated losses in the distribution system.

B. Fault Detection, Isolation and Restoration

Today's modern power grids are able to detect and isolate faults and automatically recover part of the grid. Feeder reclosers determine the fault boundary and isolate a faulty feeder section. Then, if backup power can be provided from other sources, power to the non-faulty feeder sections can be restored.

The granularity of fault detection, isolation and restoration depends on the type of recloser used for dividing the feeder line into sections, and the availability of active and reactive backup power to feed the healthy sections of the feeder line.

Figure 2 shows our case study circuit after a failure close to the main substation. The recloser isolates the faulty section 1. If enough backup power is available, the tie switch can be closed to restore power to sections 2–12.

C. Power Flow Analysis

Power flow analysis is used by all utilities/power providers for the planning and operation of an electric power supplying network. The flow of active and reactive power from one node of the system to the other node through different network buses and branches is known as power flow [13].

Power flow analysis is carried out for the base system initially and also for different scenarios including failure scenarios such as line loss or other contingencies like losing a generator. This analysis is used mainly for the steady state performance of the network.

Power flow studies provide a mathematical approach for determination of various bus (nodes) active and reactive power, voltages, and the phase angles between the voltages among different network nodes under steady state condition. This analysis is carried out based on system constraints/limits imposed on each bus based on standards and regulations. In this work we analyze a radial circuit using the recursion introduced in [3] for power flow analysis of such circuits with distribution side power management.

Conducting the studies helps planners have an understanding not only about the steady state performance of the system but also about the performance matrices of the network after fault detection and isolation. These matrices are governed by the standards set forth by regulatory authorities, mostly on the voltage at the point of coupling/bus, and the angle of deviation between the buses for transfer of power within limits. According to European regulations [15] for the distribution side the voltage needs to be within a limit of $\pm 10\%$. Voltage stability of a system depends on the available reactive power, whereas angle stability depends on available active power. The introduction of the demand response feature provides an alternative to help reduce the stress on the system.

D. Reactive Power Margin and Cost Matrix

Network planning is carried out by considering several options to deal with failure events. The loss of a substation and the switching of the load to a backup substation with limited reactive power margin can create voltage instability, if not enough reactive power generation is available at the backup substation. The first line of defense against voltage instability is to provide reactive power compensation by using shunt and series capacitors along with load tap changing transformers.

There is a need to create detailed models for the assessment of the distribution side because of the large number of options and scenarios. For example, distributed energy resources can

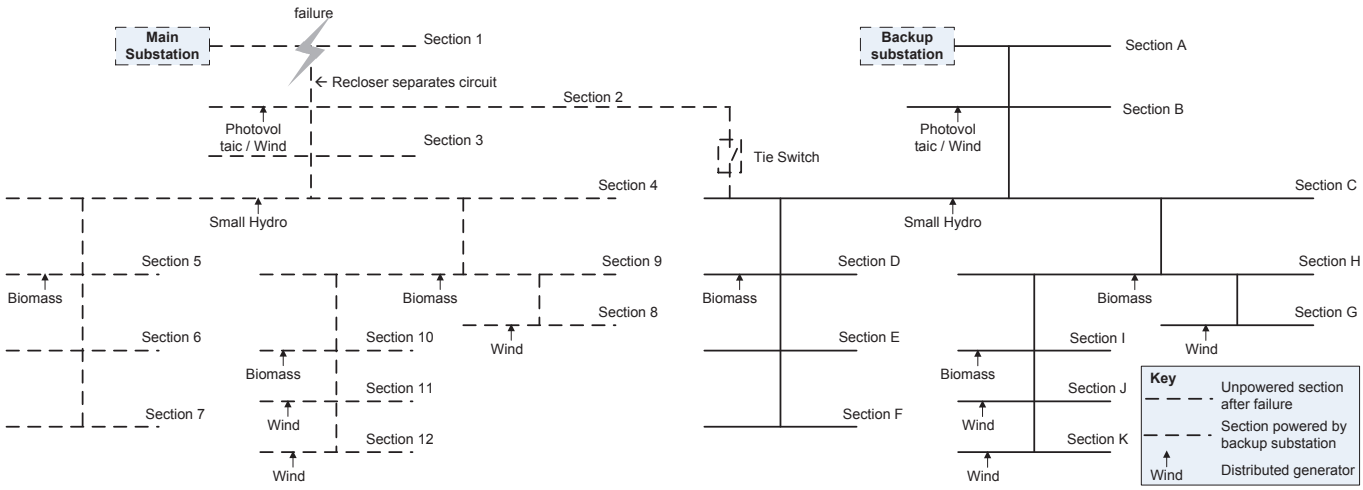

Fig. 2. Case study circuit after failure at main substation.

act either as active/reactive power source thereby relaxing the stress and increasing the reactive stability margin. Furthermore, in smart grids, consumers can be asked to reduce their load by issuing price signals or by sending commands to devices (*demand response*).

In this paper, we consider different active/reactive power generation options and required capital investments. Options 1–4 presented in Table I were derived from the data reported in the Renewable Energy Cost Database [10]. The data for reactive power pricing (option 6) was derived from [16], while the data for demand response pricing (option 5) was derived from [17]. The costs (in USD) obtained for Biomass and Solar reflect the economies of scale, i.e., larger generators generate more power per invested USD than smaller generators. In contrast, Small Hydro costs are constant at 2402 \$/kW, DStatcom costs are 55 \$/kVAr and Demand Response costs are 165 \$/kW of demand that was controlled by the demand response feature. Table I lists the generated active power in kW for generation options that generate both active and reactive power. The generated reactive power was calculated from the generated active power as described by Janev [3, Section 4.2]. For option 6, the generated reactive power is listed directly.

IV. Survivability Model

Next, we describe the survivability model and metrics that we use as part of our methodology for power grid optimization. The survivability model is a phased-recovery model, wherein the system goes through stages. The initial state consists of a failure state. Then, based on manual and automated interventions, the system goes through different steps up to reaching full recovery. Our approach is very general, and can be coupled to any phased recovery model. Next, we describe the particular instantiation of the phased recovery model from [18] considered in the remainder of this paper, and illustrated in Figure 3.

The initial state of the phased recovery model is state $\star$, a failure state. Recall that the power distribution network is split into sections. After section i is isolated, which occurs after mean time ϵ, the system goes to one of three states, depending on whether there is enough active and reactive backup power to supply energy for the sections that were indirectly affected by the failure. Such sections are referred to as the upstream sections of section i, and also denoted as $i+$. In the rest of this paper, we assume $\epsilon = 0$, as in practice the mean time to isolate a section is much smaller than the other model parameters.

In states 1 and 2 there is enough active power to supply for the upstream sections, whereas in state 3 the backup active power does not suffice. In addition, in state 1 the reactive power also suffices to supply for the upstream sections. Therefore, if the system transitions to state 1, it is amenable to automatic recovery, which occurs with rate $\alpha = 2\ \mathrm{min}^{-1}$. In that case, the system transitions to state 6. Otherwise, demand response application needs to be activated in order to reduce the load in the upstream sections. The demand response application takes mean time $1/\beta = 15$ min to be activated, and is effective to reduce the active and reactive loads with probabilities r_A and r_R, respectively. In case the demand response application effectively reduces the load, the system transitions to state 4 and is amenable to automatic recovery. In all other states the system is amenable to manual repair, which takes mean time $1/\delta = 0.25$ h.

Note that automated and manual recovery compete with each other. The manual recovery will always occur, as we assume that a truck is needed to fix the failed section i, but the automated recovery will usually occur before the manual recovery is finalized. After full recovery, the system transitions to state 0 (Figure 3).

Let $q_{A,R}$, $q_{A,\sim R}$ and $q_{\sim A}$ be the probabilities that the system transitions to states 1, 2 and 3, respectively, after a failure. These probabilities play a key role in our methodology, and depend on the circuit topology, on the amount of investment in distributed generation and on the load.

To each state state s_j, $j = 1, 2, \ldots, 6$, we associate its corresponding rate reward σ_j. In this paper, the rate reward associated to state j characterizes the energy not supplied at that state per time unit. Solving the Markov chain model, survivability related metrics such as the AENS in kWh can be computed [18], [19]. Given the survivability related metrics, we issue new recommendations on how to invest the remaining

TABLE I. COST FOR ACTIVE AND REACTIVE POWER INVESTMENT

Option Name Power Type	1 Biomass active/reactive		2 Wind active/reactive		3 Solar active/reactive		4 Small Hydro active/reactive		5 Demand Response active/reactive		6 DStatcom reactive	
	Power in kW	Total investment cost in $	Power in kW	Total inv. cost in $	Power in kW	Total inv. cost in $	Power in kW	Total inv. cost in $	Power in kW	Total inv. cost in $	Power in kVar	Total inv. cost in $
	2	10000	2	16000	2	2600	2	4804	2	330	2	110
	5	25000	5	40000	5	5500	5	12010	5	825	5	275
	10	50000	10	60000	10	14000	10	24020	10	1650	10	550
	30	150000	30	180000	30	57000	30	72060	30	4950	30	1650
	100	500000	100	350000	100	200000	100	240200	100	16500	100	5500
	250	750000	250	875000	250	350000	250	600500	250	41250	250	13750
	500	1500000	500	1750000	500	300000	500	1201000	500	82500	500	27500
	1000	3000000	1000	2000000	1000	800000	1000	2402000	1000	165000	1000	55000

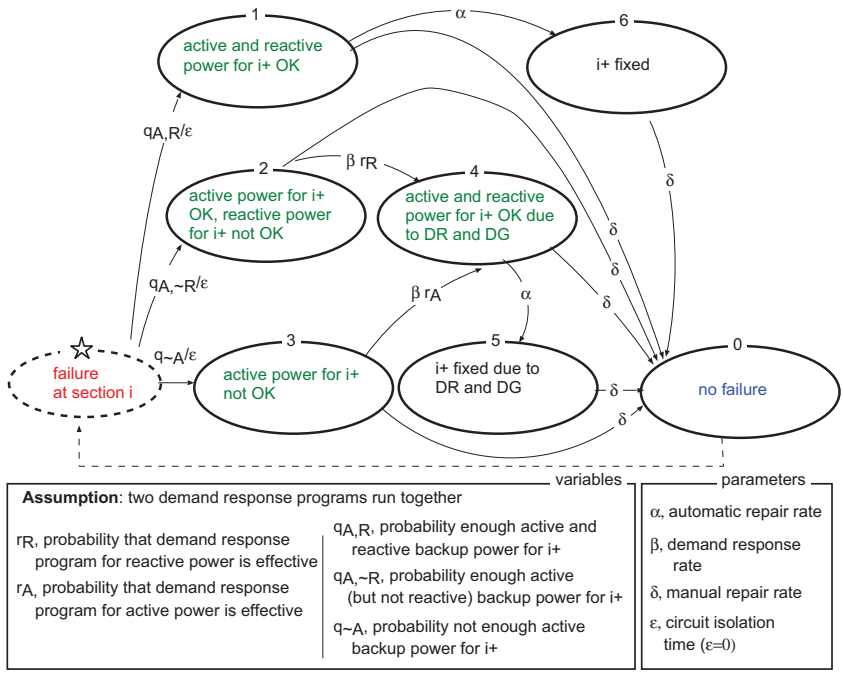

Fig. 3. Phased recovery model [18]

budget, re-compute the survivability, and repeat the cycle until reaching the desired levels of AENS.

Note that recovery upon an error/failure heavily depends on the ability to correctly estimate the system state at the time of error detection. In this paper, we assume that the system state is fully observable. If the measurement data used for the state estimation are unavailable due to communication problems, or corrupted or tampered with (e.g., by a malicious attacker), the mean time to isolate a section may be non-negligible. In such a scenario, the phased recovery model needs to be extended, for instance, to account for the probability that communication is not available after a failure occurs [12]. In this paper, we assume that the phased-recovery from a failure can be modeled as a homogeneous continuous time Markov chain. Extensions to accommodate non-exponential sojourn times [20] are subject for future work.

V. PARAMETERIZATION OF THE SURVIVABILITY MODEL

All our analysis is done conditioned on the failure of a given section. As mentioned in Section II, we consider a worst case scenario, wherein the section that fails is the one closest to the main substation. Then, once a failure occurs, the topology of the power grid changes, as the faulty section is isolated and its upstream sections are connected to a backup substation. Given the modified topology, we run the power flow algorithm. For a given load, the algorithm yields the voltage magnitude and voltage angle at each of the sections. We compute these metrics for multiple values of load, which correspond to variations of demand over the day.

The inputs to the parameterization thus are:

1) load data, e.g., a 24 hour load profile at 15-minute intervals (i.e., 96 load points);
2) a model of the power circuit topology after the failure and after fault isolation;
3) for each load point, the voltage and angle at each section, obtained from the power flow model.

Recall that the key input parameters of the survivability model are (1) the probabilities that the backup and distributed generation sources suffice to supply active and reactive energy for the sections that are affected by a failure, $q_{A,R}$, $q_{A,\sim R}$,$q_{\sim A}$, (2) the probabilities that demand response is effective, r_A and r_R, and (3) the reward rates at each of the model states. The methodology to obtain these three sets of parameters is

described in sections V-A, V-B, and V-C, respectively, and is a function of the load data and violation matrices that are described next.

One of the most important ingredients to our model is a time series characterizing how load varies for different times of the day over different sections. In the remainder of this paper, we assume that the day is divided into 15 minutes time slots. Each slot of 15 minutes is referred to as a given *time of the day* or *load point*. The active power load at section i and load point j is then denoted $l^a_{i,j}$. The corresponding reactive power load is denoted $l^r_{i,j}$. In the remainder of this paper we denote a matrix of scalars, of k lines and t columns, by $\mathbb{R}^{k\times t}$. Let k be the number of sections in the circuit. Let t be the number of load points used to parametrize the survivability model. The overall load is then characterized as two matrices $L_a = l^a_{i,j} \in \mathbb{R}^{k\times t}$ in kW and $L_r = l^r_{i,j} \in \mathbb{R}^{k\times t}$ in kVar.

The *violation matrices* $M_{\sim A}$, $M_{A,\sim R}$ and $M_{A,R}$ are determined by solving the power flow model and characterize the chances that active and reactive power will suffice to supply for the upstream sections $i+$ after the failure of a tagged section i. A violation matrix is a matrix $M \in \{0,1\}^{k\times t}$.

In what follows, we will describe how to compute $M_{\sim A}$. Each entry of $M_{\sim A}$ characterizes whether there is a violation of active power at a given section at a given instant of the day, after the failure of a tagged section. The element in line i and column j of the violation matrix $M_{\sim A}$ is defined as a function of the output of the power flow algorithm as follows,

$$a_{i,j} = \begin{cases} 1, & \text{if there is a violation of active power,} \\ & \text{i.e., the angle is out of limits} \\ & \text{+/-10\% at section } i \text{ at time } j \\ 0, & \text{otherwise} \end{cases} \tag{1}$$

Matrix $M_{A,\sim R}$ (resp., $M_{A,R}$), where each entry characterizes whether there is a violation of reactive power at a given section at a given instant of the day while active power has no violation (resp., of there being no violation at all), can be defined and computed similarly.

A. Parametrization of Sufficiency of Backup Power

In this paper, we assume that the fraction of sections *and* load points for which the violation matrix entry is equal to 1 is a surrogate for the probability that there will be a disruption in the network. Then, the average of the elements of the violation matrix $M_{\sim A}$ is the probability that backup active power does not suffice to supply for the upstream sections. Let $\rho_{\sim A}$ be the number of load points and sections for which the load is large enough to cause the voltage or angle to be beyond desired bounds,

$$\rho_{\sim A} = \sum_{i=1}^{k}\sum_{j=0}^{t} a_{i,j}, \text{ where } a_{i,j} \in M_{\sim A} \tag{2}$$

Then,

$$q_{\sim A} = \rho_{\sim A}/(k \cdot t) \tag{3}$$

$q_{A,R}$ and $\rho_{A,R}$ (resp., $q_{A,\sim R}$ and $\rho_{A,\sim R}$) can be similarly defined and computed as a function of $M_{A,R}$ (resp., $M_{A,\sim R}$).

B. Parametrization of Effectiveness of Demand Response

To compute the probabilities r_A and r_R that demand response is effective to cope with a lack of active and reactive power, respectively, we reduce the load by the amount of load amenable to demand response. The loads amenable to demand response in section i at load point j are denoted by $d^a_{i,j}$ in kW for the active load and $d^r_{i,j}$ in kVar for reactive load. Let D_a and D_r denote the resulting matrices in $\mathbb{R}^{k\times t}$. Then, the new load after demand response has been called for is denoted by $L^{(dr)}_a = L_a - D_a$ for active load and $L^{(dr)}_r = L_r - D_r$ for reactive load. For these new load data, we solve the power flow again and obtain new violation matrices $M^{(dr)}_{\sim A}$, $M^{(dr)}_{A,\sim R}$, and $M^{(dr)}_A$. Let $\rho^{(dr)}_{\sim A}$ be the number of load points and sections that still have violations, after demand response is called for. $\rho^{(dr)}_{\sim A}$ is computed using (2), replacing $M_{\sim A}$ by $M^{(dr)}_{\sim A}$. Similarly, $\rho^{(dr)}_{A,\sim R}$ is computed using (2), replacing $M_{\sim A}$ by $M^{(dr)}_{A,\sim R}$.

The effectiveness of demand response is the ratio of the number of scenarios for which the circuit is stable after reducing the load when demand response is called for, divided by the total number of scenarios at which the circuit was unstable at first place:

$$r_A = 1 - \rho^{(dr)}_{\sim A}/\rho_{\sim A}, \quad r_R = 1 - \rho^{(dr)}_{A,\sim R}/\rho_{A,\sim R} \tag{4}$$

C. Parametrization of Reward Rates

The reward rates at each of the model states are obtained from the load data and the state of the individual sections.

In *states 1-3*, the average energy supplied (AES) is zero and the AENS equals the sum of the active power load of all sections. In *state 4*, the AENS decreases by the amount of load amenable to demand response. In *state 5*, all upstream sections $i+$ have been recovered while the demand response program is active, so the AES is the active power load of sections $i+$ reduced by the amount of load amenable to demand response and the AENS is the active power load of section i. In *state 6*, all upstream sections have been recovered by the backup substation and the full energy is supplied, so the AES is the active power load of sections $i+$ and the AENS is the active power load of section i. Finally, *in state 0* the main substation has been recovered as well, so that AES is the sum of the load of all sections and AENS is zero.

Note that the AES and AENS metrics measure the active power supplied or not supplied, but not reactive power. This is because active power is billed to the customer. So, the loss of revenue in case of failure is based on the active energy not supplied. Even though providing reactive power, by itself, is not a survivability metric, reactive power is taken into account in the survivability model. Without reactive power the circuit will be unstable and no active power will be supplied.

VI. Evaluation

In this section, we present the application of our approach to a realistic case study system. Section VI-A describes the case study system the parametrization of the survivability model for this case study, and the optimization heuristics. Finally, Section VI-B presents the evaluation results, before Section VI-C discusses our findings.

TABLE II. AVERAGE LOAD PER SECTION FOR SECTIONS 1 - 7 AND TOTAL LOAD (IN KW AND KVAR FOR ACTIVE AND REACTIVE ENERGY, RESPECTIVELY)

section	active power load.	reactive power load
1	552.22	181.51
2	649.67	213.54
3	0.00	0.00
4	649.67	213.54
5	696.54	228.94
6	696.54	228.94
7	696.54	228.94
8	639.26	210.11
9	696.54	228.94
10	639.26	210.11
11	649.67	213.54
12	692.77	227.70
A	640.97	210.68
B	0.00	0.00
C	640.97	210.68
D	690.69	227.02
E	690.69	227.02
F	690.69	227.02
G	635.59	208.91
H	690.69	227.02
I	635.59	208.91
J	640.97	210.68
K	690.69	227.02
total for all sections	13906.2	4570.8

A. Case Study Setup

The case study system is based on a simple distribution automation network which has been suggested as a distribution automation benchmark by Rudion et al. [21] and which is derived from a German medium voltage distribution network. The network supplies a small town and the surrounding rural area. To cover more investment options, we duplicated the benchmark network (sections 2-12 are a copy of sections A-K, section 1 is another copy of section A with reduced load) and connected the two with a tie switch that closes in case of failure. The resulting network is shown in Figure 2.

Worst-case scenario analysis is usually used in risk management of critical infrastructures [22]. Thus, in this work, we assume the worst case failure in this circuit, which is a failure in section 1 as shown in Figure 2. This failure initially causes the left circuit to be unpowered. Then, the recloser can be opened to isolate the failure, and the tie switch can be closed to power sections 2 to 12 from the backup substation. Our power flow analyses will show in which cases the resulting circuit would be stable, i.e. the system can quickly recover by using distribution automation.

Representative profile characteristics are based on the real-world conditions as described in [3]: the load profiles used in this case study were taken from the association of the electrical energy industry in Germany (BDEW), the generation profiles were taken from EnBW (Germany), and the wind profile used here was taken from E.on Netz (Germany). The data represents average values for the load and generation over the course of a day. The total active and reactive loads, averaged over the 96 load points, is equal to 13,906.00 KW and 4,570.80 KVar, respectively. Table II exemplarily shows the active power load and the reactive power load of the first seven sections averaged over the day. We furthermore assume that, initially, 10% of the load in each section is amenable to demand response mechanisms in this system.

Parameterizing the Survivability Model: For each candidate circuit, the power flow model is solved to parametrize the survivability model. The transition probabilities and the reward rates of the survivability model are determined based on the power flow results as described in Section V. As an example, the reward rates for the initial circuit candidate, which are derived from the initial load data, are shown in Table III.

TABLE III. REWARD RATES FOR INITIAL CIRCUIT CANDIDATE c_0: ENERGY SUPPLIED PER HOUR (ES/H) AND ENERGY NOT SUPPLIED PER HOUR (ENS/H) IN KW OR KVAR.

state	1 -3	4	5	6	0
Active AES/h	6648	6648	12683	13354	13906
Active AENS/h	7259	6533	497	552	0
Reactive AES/h	2185	2185	4169	4389	4571
Reactive AENS/h	2386	2147	163	182	0

The reward rates of states 0-3 and 6 are constant over the course of the optimization, while the reward rates of states 4 and 5 are determined anew for each circuit candidate because the load data may vary due to demand response investments (see Section V-C). Based on the selected demand response investments per section, the AENS is reduced by the amount of power that is susceptible to demand response.

Investment Options and Constraints: We consider a set of investment options as summarized in table I, Section III-D. All active power investments also generate reactive power. Reactive power generation is calculated based on the German code for distributed generators by BDEW as described in [3]. Reactive power investments (i.e., DStatcom) only add reactive power to the system.

To reflect additional constraints on investment options, we limit the number of selections as follows. Per section, only one generator per type can be added, e.g. one DStatcom. Globally, only three investment options of the same type can be used. These constraints reflect additional considerations and rules of thumb of power engineers not captured in the survivability model, such as the tolerance of the residents in an area. Additional constraints formulated by power engineers can be included easily in the algorithm. Additionally, the costs constraint in this case study is set to 2 million.

Optimization Heuristics: We present results based on four heuristics for selecting investments. The basic algorithm underlying all heuristics has been shown in Figure 1.

At each step, heuristics are used to select (1) the power type (active or reactive), (2) the section to invest and (3) the type of investment to place in the selected section. All heuristics select the power type to provide and the section to invest to in the same way. The type of power to add is selected based on the violation matrices of the power flow results (cf. Section V). If more voltage violations are observed, $\rho_{A,\sim R} \geq \rho_{\sim A}$, investments for reactive power should be chosen. If more angle violations are observed, $\rho_{A,\sim R} < \rho_{\sim A}$, investments for active power should be chosen. Furthermore, the algorithm decides in which section to invest based on the number of voltage or angle violations in the power flow. The section with most violations is selected. If there is a tie, one of the sections with maximum number of violations is randomly selected.

The four heuristics differ in the approach used to select the type of investment to place in the selected section. We formulated three heuristics that are supposed to reflect investment

TABLE IV. STATISTICS OF THE OPTIMIZATION ALGORITHM RUNS

Variant	Number of evaluated candidate models	Duration in min
Efficient	65	24
Cheapest	118	46
Powerful	27	10
Steepest-Ascent	85	27

strategies in the real world. The first strategy is to invest in the *cheapest* available investment options to keep costs low and advance in small steps. The second strategy is to invest in the most *efficient* investment option in terms of the ratio of provided power in kW or kVAr to the cost of the selected option. The third strategy is to always invest in the most *powerful* option available in terms of provided power in kW or kVAr. This strategy is often similar to the most efficient strategy, as more powerful generators tend to be more efficient due to economies of scale (cf. Section III-D).

We also developed a fourth heuristic, referred to as *steepest-ascent* heuristic, which combines the three heuristics mentioned above. Under the steepest-ascent heuristic, in each iteration of the optimization, each of the three heuristics presented above is evaluated and the option with the highest improvement (if any) is selected.

B. Results

Table IV presents the statistics obtained by evaluating the four optimization heuristics on an IBM Thinkpad with two Intel Core 2 CPUs at 2GHz. The powerful variant is fastest because it has the lowest number of power flow and survivability evaluations. The cheapest variant is the slowest because more evaluations are required when the heuristic uses the cheaper options first.

Figure 4 shows the results of each of the four variants. Each data point marks a candidate that improved the survivability of its parent. The candidates are plotted by their costs $\textsc{Cost}(c)$ on the x axis and survivability $\textsc{Aens}(c)$ on the y axis.

The initial distribution grid is the starting point for all four variants at cost 0 and AENS 11 862 kWh. From there, the heuristics gradually succeed to reduce the AENS while inevitably resulting in higher costs.

The table in Figure 4 shows three example solution candidates showing the AENS, the costs, and the options selected for each section. The last example shown is the final candidate found by the heuristic which selects the most powerful choice at each iteration. It achieves the lowest AENS with 3 440 kWh (improvement of 8 422 kWh), but at high cost of almost $1 994 015. The second example candidate is a solution found at around the knee point of the trade-off curve by the steepest-ascent heuristic and represents an investment of $363 660 and an AENS improvement of only 6 850 kWh. It uses only demand response investments. Finally, the first candidate is found by the heuristic which selects the most efficient choice at each iteration, and represents a comparably inexpensive solution: It improves AENS by 2 660 kWh with investment costs of $109 065.

The shape of the trade-off curve is also visible in Figure 4. Starting at costs $0, first a steep improvement of AENS can be achieved by small investments. Later, the curve flattens and the same AENS improvement is only achieved with higher investments.

We observe that the different algorithm variants perform differently in different regions of the empirically derived trade-off front. For small investments, the cheapest variant and the efficient variant sample the solution space better and provide many solutions with small investment yet considerable AENS gain. In a slim middle region of $330 000 to $550 000, the powerful and the steepest-ascent variants find the best solutions. In particular, the solutions found by the cheapest variant are inferior in this region, as they achieve higher AENS with the same budget. Finally, in the high investment region above $550 000, the powerful variant is most successful and finds superior solutions, whereas the efficient variant still provides more solutions of almost the same quality.

C. Discussion

The empirical results presented in this paper provide insights into the relation of investment and survivability and can thus support engineers to plan investments for the distribution grid. The candidate circuits obtained by our algorithms are samples of the solution space. As such, there is no guarantee for the global optimality of the solutions presented in this paper. In future work, we will tackle this problem of defining specialized optimization models and algorithms which are guaranteed to converge to globally optimal solutions under suitable assumptions.

Our tool can be used for return on investment computation (survivability/cost). We have found that an investment between $330K and $550K leads to good operating points as the improvement in survivability for higher investment values (greater than $550k) is marginal.

Our methodology can also be used in conjunction with a manual approach. Engineers can use the power flow and survivability analysis to assess distribution grid models they manually created based on their design experience. Thus, they can support their good practices and rule of thumb by quantitative analysis of expected survivability metrics.

VII. LITERATURE REVIEW

The available literature on power systems reliability is extensive [23], [24], [25]. Recently, researchers have studied how to improve power systems reliability with smart grid techniques [26], [27], [28]. To our knowledge, our work is the first to assess and optimize survivability metrics of power systems accounting for the implications of electro-mechanical and computer-based strategies to address failures in an integrated manner.

Elmakias [24] presents a review of computational methods in power system reliability. The focus of the review is on the application of Markov models to reliability assessment. To address failures in the distribution system, the author studied a number of approaches such as the reduction of main feeder line length, the introduction of sectionalizer switches, and the automatic connection of backup power supply to sections isolated. The analysis focuses on steady state metrics, whereas in this paper our focus is on studying the system after a failure occurs. Conditioning the initial state to be a failure state

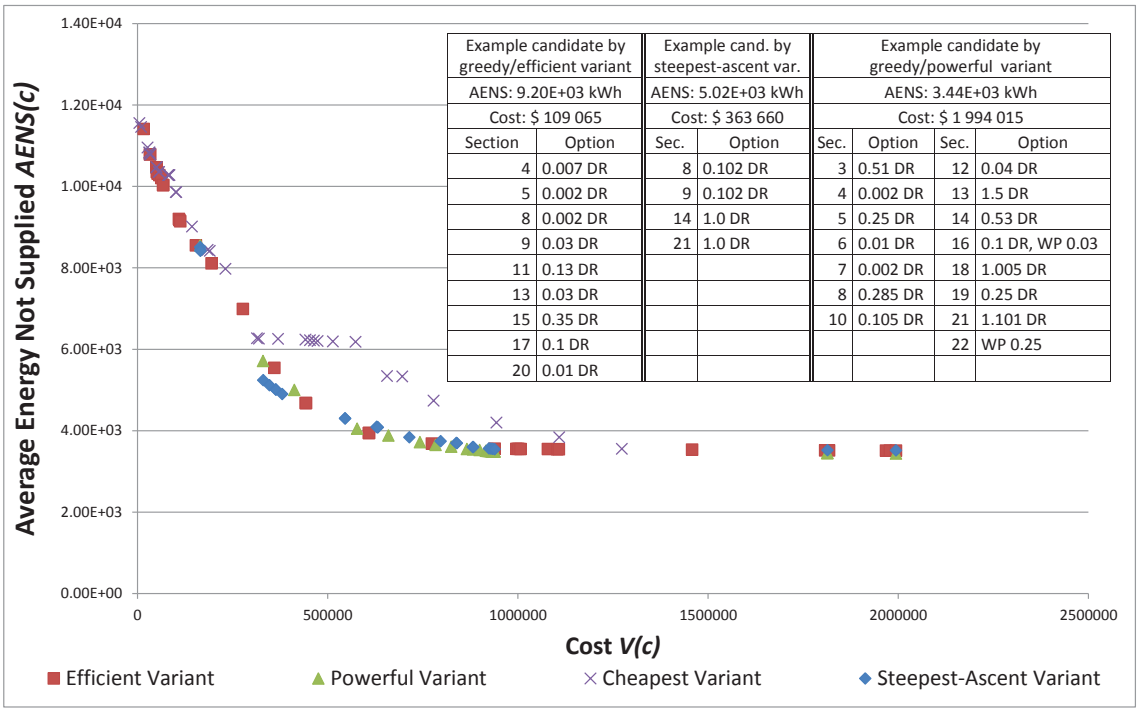

Example candidate by greedy/efficient variant		Example cand. by steepest-ascent var.		Example candidate by greedy/powerful variant			
AENS: 9.20E+03 kWh		AENS: 5.02E+03 kWh		AENS: 3.44E+03 kWh			
Cost: $ 109 065		Cost: $ 363 660		Cost: $ 1 994 015			
Section	Option	Sec.	Option	Sec.	Option	Sec.	Option
4	0.007 DR	8	0.102 DR	3	0.51 DR	12	0.04 DR
5	0.002 DR	9	0.102 DR	4	0.002 DR	13	1.5 DR
8	0.002 DR	14	1.0 DR	5	0.25 DR	14	0.53 DR
9	0.03 DR	21	1.0 DR	6	0.01 DR	16	0.1 DR, WP 0.03
11	0.13 DR			7	0.002 DR	18	1.005 DR
13	0.03 DR			8	0.285 DR	19	0.25 DR
15	0.35 DR			10	0.105 DR	21	1.101 DR
17	0.1 DR					22	WP 0.25
20	0.01 DR						

Fig. 4. Comparison of optimization algorithms. Also shows table with three example solutions. Investment options are represented by generated power (in mW or mVAr) and investment type key. Key: DR = Demand response, WP = Wind Power

is important in order to evaluate metrics such as the average energy not supplied until recovery.

Janev [3] presents the implementation and evaluation of a power flow algorithm for power distribution grids with distributed generation. In this work we applied the algorithms presented in [3] to support a survivability based capacity planning approach for power distribution networks. Specifically, the power flow approach presented in [3] was evaluated using an adaptation of a power distribution benchmark [21]. This benchmark employs the following types of renewable power generation equipment: Photovoltaic, Wind, Small Hydro, and Biomass.

Martins [29] presents a model for active distribution systems expansion planning that considers distributed generation together with traditional alternatives for distribution expansion such as rewiring, network reconfiguration and installation of protection devices. The authors evaluate different alternatives for distribution automation using average reliability metrics (SAIDI, SAIFI) and cost.

Heegaard and Trivedi [6] studied the survivability of telecommunication systems. They presented a phase recovery model to capture the transient properties of the system after a failure. Our model differs from [6] in a number of ways, as we account for features that are specific to the smart grid domain and use them for optimization purposes.

Performability metrics have been defined to measure the ability of a system to continue to operate after a component failure but at (possibly) different performance levels [7], [8]. Performability is usually concerned with the quality of service provided that the system is operational. The initial system state is chosen accordingly. In this paper, in turn, our focus is on survivability metrics. In this case, the initial state of the system is set to a failure state, so survivability is "conditional performability" [9].

Keshav and Rosenberg [30] argued that concepts pioneered by the Internet are applicable to the design of smart grids, and suggest the initiation of a dialogue between the Internet community and the electrical grid research community. Our work is a product of such a dialogue.

VIII. Conclusions

Smart grids are fostering a paradigm shift in the realm of power distribution systems. In this paper we start to tackle the need of a unified, holistic and computationally efficient approach, that takes into consideration the interplay of traditionally different components of the power distribution system, by presenting a framework for the survivability analysis of smart distribution power grids. We combine high-level survivability analysis with electric power flow analysis. Our approach uses power flow analysis to determine the probabilities that a system is unstable after a failure occurs. We base our analysis on the detailed load and generation data available from grid operators, which contain the demanded power and generated power for each hourly interval over the day. The power flow results are used to parametrize the survivability model and determine the expected average energy not supplied (AENS) after a certain failure occurs.

We used the proposed methodology in this paper to efficiently evaluate a large number of distribution automation network design candidates, as shown in the empirical results section. We examined 65 options for the efficient variant, 118 options for cheapest variant, 27 options for the powerful and 85 options for the steepest-ascent variant. Using the presented methodology engineers can create cost efficient and survivable

smart-grid network designs that match the engineering range for best survivability at reasonable investment levels.

In future work, we are considering the extension of our survivability based model by addressing the smart-grid integration with communication networks and by evaluating the use of more complex topologies that can take into account several recovery paths (e.g., connection to several backup sources), more complex failure trees (cascading failures), failure models with non-exponential residence times and other features that are required to be included in the modeling of industrial distribution networks. In addition, we propose to evaluate the impact of failure restoration on power dispatching models at the transmission level, and to account for the time dynamics of renewable power generation, such as wind power and solar power generation, and its impact on survivability modeling.

REFERENCES

[1] IEEE Std. 1366-2003, *IEEE Guide for Electric Power Distribution Reliability Indices*. New York, NY, USA: IEEE Standards Board, 2003.

[2] Z. Ma, "Towards a unified definition for reliability, survivability and resilience (I): the conceptual framework inspired by the handicap principle and ecological stability," in *Aerospace Conference, 2010 IEEE*, march 2010, pp. 1–12.

[3] V. Janev, *Implementation and evaluation of a distribution load flow algorithm for networks with distributed generation*. Semester Thesis, Swiss Federal Institute of Technology, Zurich, 2009.

[4] T. J. Overbye, X. Cheng, and Y. Sun, "A comparison of the ac and dc power flow models for lmp calculations," *Hawaii International Conference on System Sciences*, vol. 2, p. 20047a, 2004.

[5] A. Avritzer, E. de Souza e Silva, R. Leão, and E. Weyuker, "Automated generation of test cases using a performability model," *IEE IET Software*, 2011.

[6] P. E. Heegaard and K. S. Trivedi, "Network survivability modeling," *Computer Networks*, vol. 53, no. 8, pp. 1215–1234, 2009.

[7] J. Meyer, "On evaluating the performability of degradable computing systems," *IEEE Transactions on Computers*, vol. 29, pp. 720–731, 1980.

[8] J. F. Meyer, "Performability: a retrospective and some pointers to the future," *Performance evaluation*, vol. 14, pp. 139–156, 1992.

[9] Y. Liu and K. Trivedi, "Survivability quantification: The analytical modeling approach," *International Journal of Performability Engineering*, vol. 2, no. 1, pp. 29–44, 2006.

[10] US Gov. EPA, "Renewable energy cost database," http://www.epa.gov/cleanenergy/.

[11] D. S. Menasché, R. M. Meri Leão, E. de Souza e Silva, A. Avritzer, S. Suresh, K. Trivedi, R. A. Marie, L. Happe, and A. Koziolek, "Survivability analysis of power distribution in smart grids with active and reactive power modeling," *SIGMETRICS Performance Evaluation Review*, vol. 40, no. 3, pp. 53–57, Jan. 2012.

[12] A. Avritzer, S. Suresh, D. S. Menasché, R. M. M. Leão, E. de Souza e Silva, M. C. Diniz, K. Trivedi, L. Happe, and A. Koziolek, "Survivability models for the assessment of smart grid distribution automation network designs," in *Proceedings of the fourth ACM/SPEC International Conference on Performance Engineering (ICPE 2013)*, ser. ICPE '13. New York, NY, USA: ACM, 2013, pp. 241–252.

[13] G. Anderson, "Modelling and analysis of electric power systems," Lecture 227-0526-00, ITET ETH Zurich, 2008.

[14] Businessweek, "Hurricane Sandy boosts the generator makers," Bloomberg Businessweek Magazine, 2012, http://www.businessweek.com/articles/2012-11-05/hurricane-sandy-boosts-the-generator-makers.

[15] "Voltage disturbances, standard en 50160 - voltage characteristics in public distribution systems," Copper Development Association, 2004.

[16] F. Alvarado, B. Borissov, and L. Kirsh, "Reactive power as an identifiable ancilary server," Transmission Administrator of Alberta, Ltd., 2003.

[17] "Building the dsr roadmap," Proceedings of the PJM Symp. on Demand Response II, 2008.

[18] D. S. Menasché, R. M. M. Leão, E. de Souza e Silva, A. Avritzer, S. Suresh, K. Trivedi, R. A. Marie, L. Happe, and A. Koziolek, "Survivability analysis of power distribution in smart grids with active and reactive power modeling," in *GreenMetrics'12 Workshop*, 2012, to appear in the ACM SIGMETRICS Performance Evaluation Review.

[19] K. S. Trivedi, *Probability and Statistics with Reliability, Queuing and Computer Science Applications*, 2nd ed. John Wiley & Sons, 2001.

[20] A. Horváth, M. Paolieri, L. Ridi, and E. Vicario, "Transient analysis of non-markovian models using stochastic state classes," *Performance Evaluation*, vol. 69, no. 7, pp. 315–335, 2012.

[21] K. Rudion, A. Orths, Z. Styczynski, and K. Strunz, "Design of benchmark of medium voltage distribution network for investigation of dg integration," in *Power Engineering Society General Meeting, 2006. IEEE*, 0-0 2006, p. 6 pp.

[22] B. Rustem and M. Howe, *Algorithms for worst-case design and applications to risk management*. Princeton, NJ [u.a.]: Princeton University Press, 2002.

[23] E. R. Brown, *Electric Power Distribution Reliability*, 2nd ed. CRC Press, 2002.

[24] D. E. Elmakias, *New Computational Methods in Power System Reliability*. Springer, 2010.

[25] A.A.Chowdhury, S. Agarwal, and D. Koval, "Reliability modeling of distributed generation in conventional distribution systems planning and analysis," *IEEE Transactions on Industry Applications*, vol. 39, no. 5, pp. 1493–1498, 2003.

[26] I. Waseem, *Impacts of Distributed Generation on the Residential Distributed Network Operation*. M.Sc. Thesis, Virginia Polytechnic Institute, 2008.

[27] K. Moslehi and R. Kumar, "A reliability perspective of the smart grid," *IEEE Transactions on Smart Grid*, pp. 57–64, june 2010.

[28] B. D. Russell, C. L. Benner, R. M. Cheney, C. F. Wallis, T. L. Anthony, and W. E. Muston, "Reliability improvement of distribution feeders through real-time, intelligent monitoring," in *Power Engineering Society, IEEE General Meeting*, 2009, pp. 1–8.

[29] V. Martins and C. Borges, "Active distribution network integrated planning incorporating distributed generation and load response uncertainties," *Power Systems, IEEE Transactions on*, vol. 26, no. 4, pp. 2164 –2172, nov. 2011.

[30] S. Keshav and C. Rosenberg, "How internet concepts and technologies can help green and smarten the electrical grid," *ACM SIGCOMM Computer Communication Review*, 2011.